G. L. Nause Company, Inc.
Lifetime® Wagons
1971 Phoenix Drive
Loveland, Ohio 45140
(513) 722-9500
www.GLNause.com

PERFORMANCE
SATISFACTION GUARANTEED
OR
YOUR MONEY BACK

Bill of Material
Hoelscher Model 1000
Push Over Arm Retro Fit Kit (Rev. 2-1/1/2020)

For Serial #04236 (2006) and Later

For Serial #04335 and earlier slight modification or replacement of Push Over Arm is required.

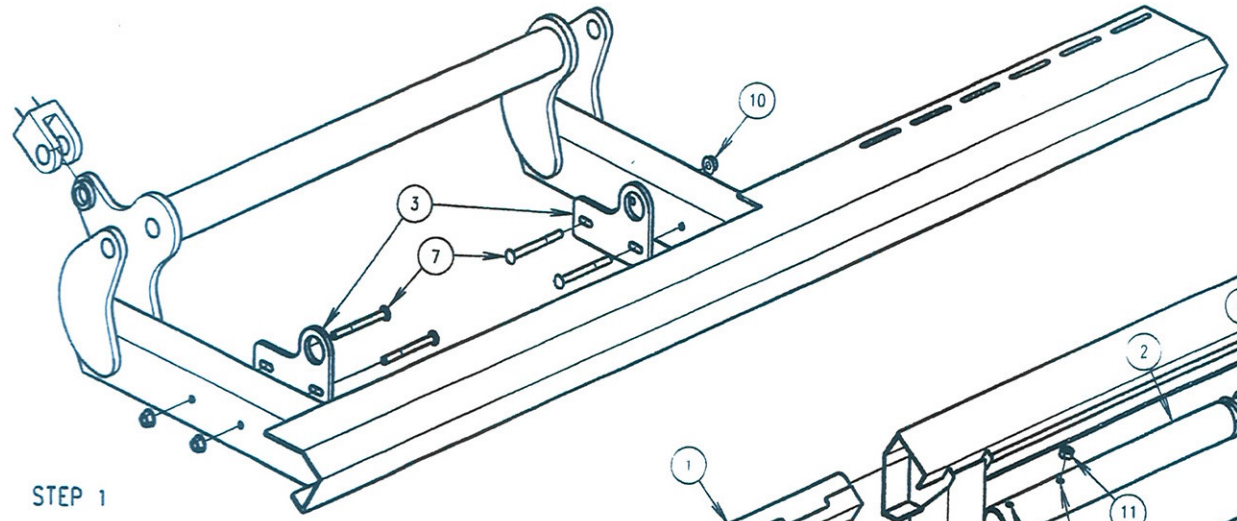

STEP 1

1. DETACH HYDRAULIC CYLINDER FROM PUSH-OVER ARM.
2. IF ARM DOES NOT HAVE BOLT HOLES, DRILL THEM AS SHOWN BELOW.
3. INSTALL GUIDE PLATES AS SHOWN. DO NOT TIGHTEN BOLTS.

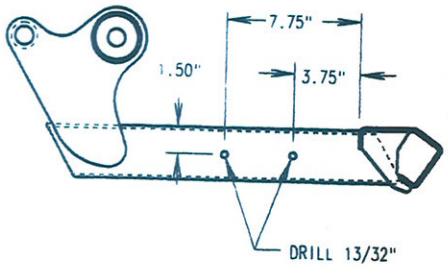

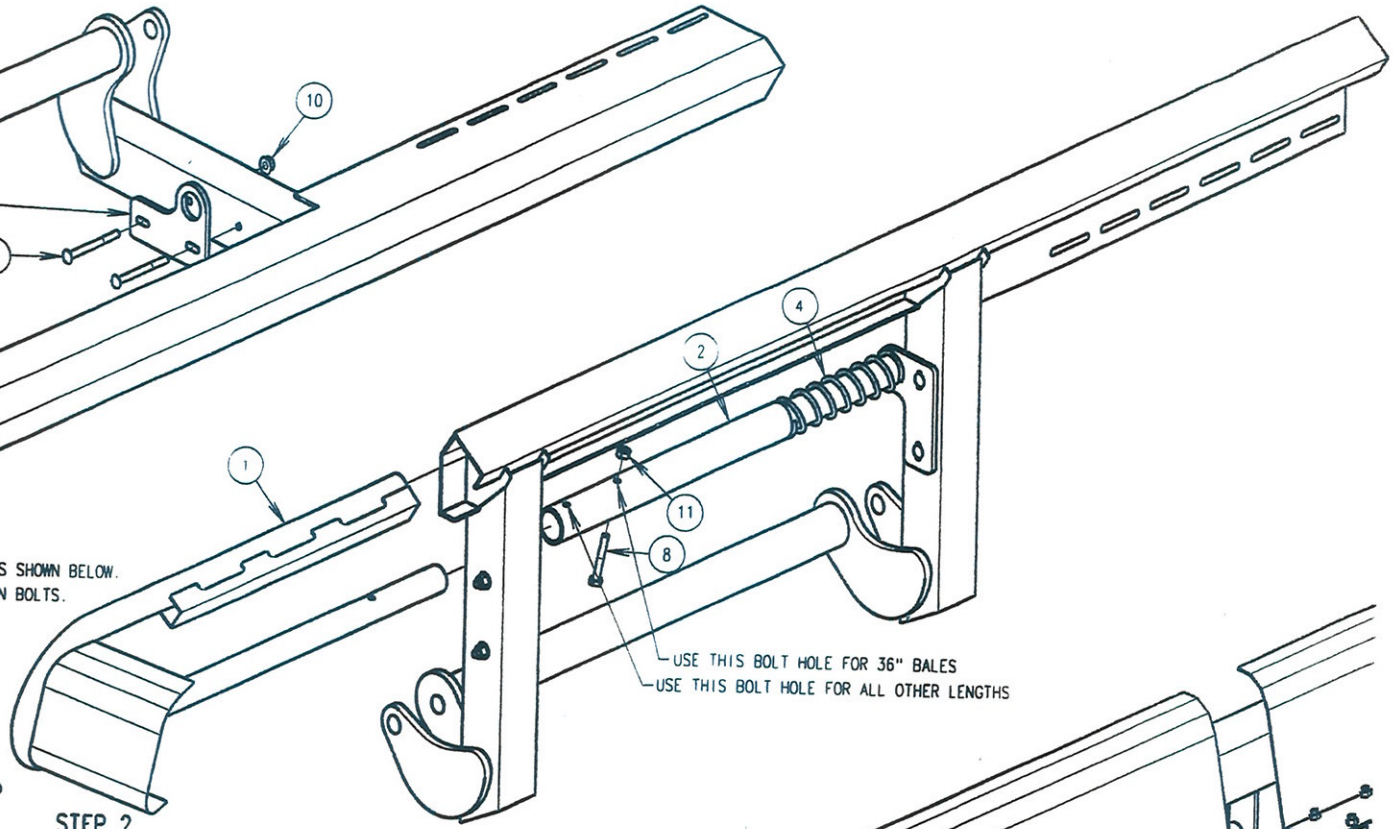

STEP 2

1. RAISE PUSH-OVER ARM TO "UP" POSITION.
2. PLACE SPRING OVER TAIL AND INSERT THROUGH REAR GUIDE PLATE
3. INSERT LONG LEG OF HOOK THROUGH FRONT GUIDE PLATE AND INTO TAIL
4. INSERT SHORT LEG OF HOOK INTO FRONT OF PUSH-OVER ARM.
5. TAIL SHOULD BE PARALLEL WITH PUSH-OVER ARM.
6. TIGHTEN ALL BOLTS

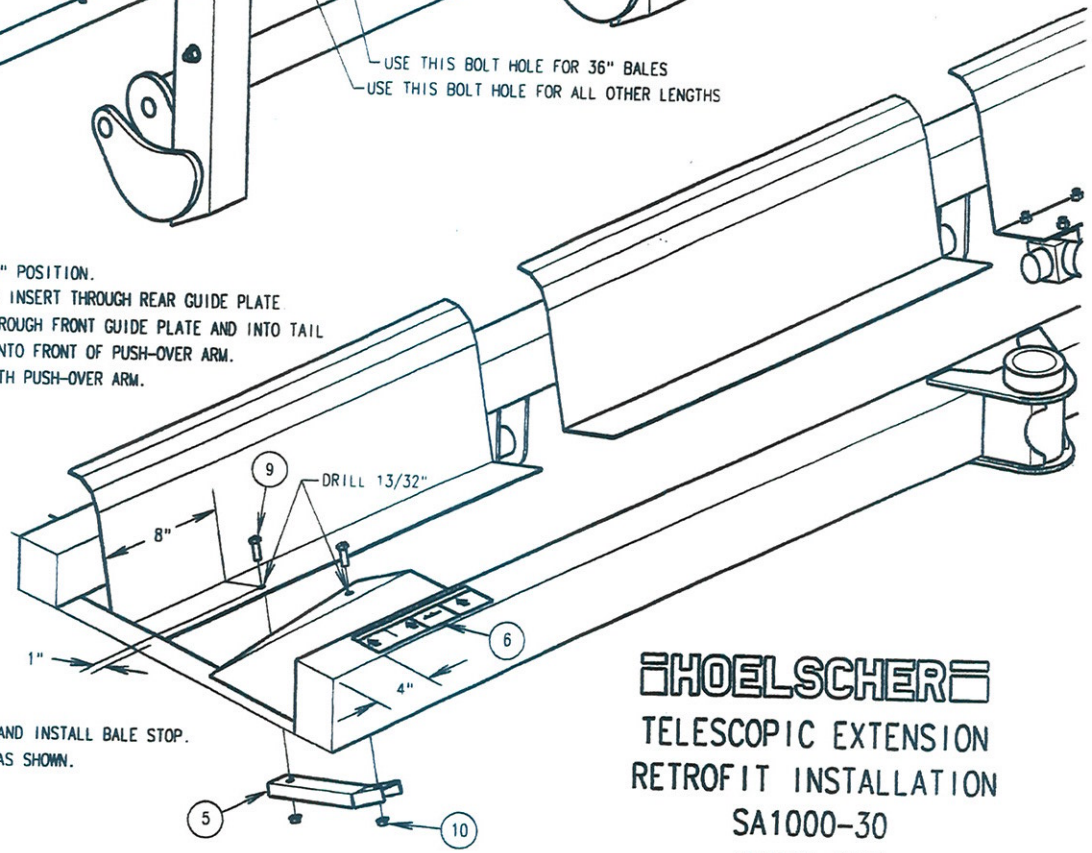

STEP 3

1. DRILL HOLES AND INSTALL BALE STOP.
2. APPLY DECAL AS SHOWN.

NO	DESCRIPTION	PART NO	QTY
1	HOOK	02435	1
2	TAIL	02436	1
3	GUIDE PLATE	02348	2
4	SPRING	02349	1
5	BALE STOP	02346	1
6	DECAL-BALE LENGTH SETTING	02434	1
7	BOLT-0.375" x 4.0" NC-CARRIAGE	02407	4
8	BOLT-0.375 x 2.5 NC-HEX	01458	1
9	BOLT-0.375 x 1.0 NC-HEX	01446	2
10	NUT-0.375 NC-FLANGE	01443	6
11	NUT-0.375 NC-LOCK	01454	1

HOELSCHER

TELESCOPIC EXTENSION RETROFIT INSTALLATION

SA1000-30

AVAILABLE JUN'15

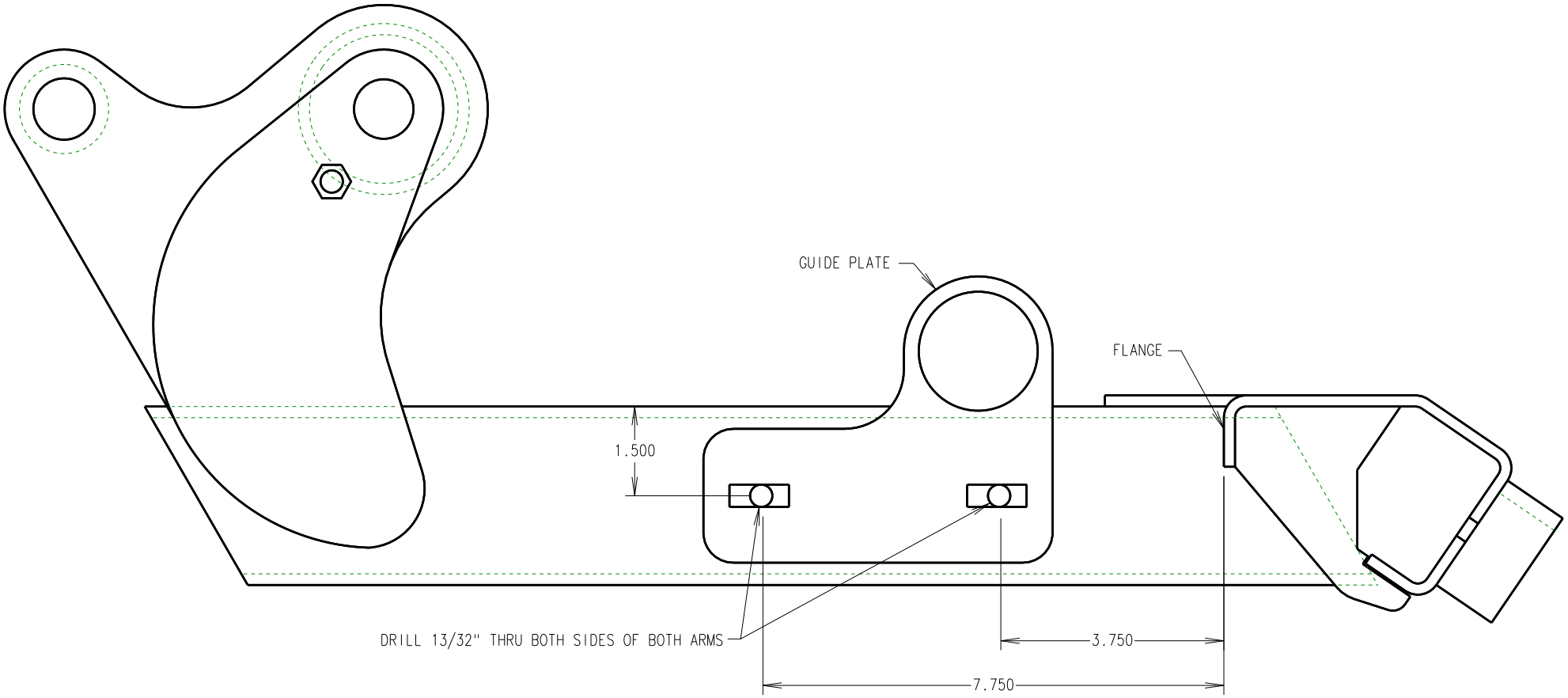

HOELSCHER

DRILLING INSTRUCTIONS-TELESCOPIC EXTENSION

FOR S/N: 04230-05192

NOTICE
WARNIN

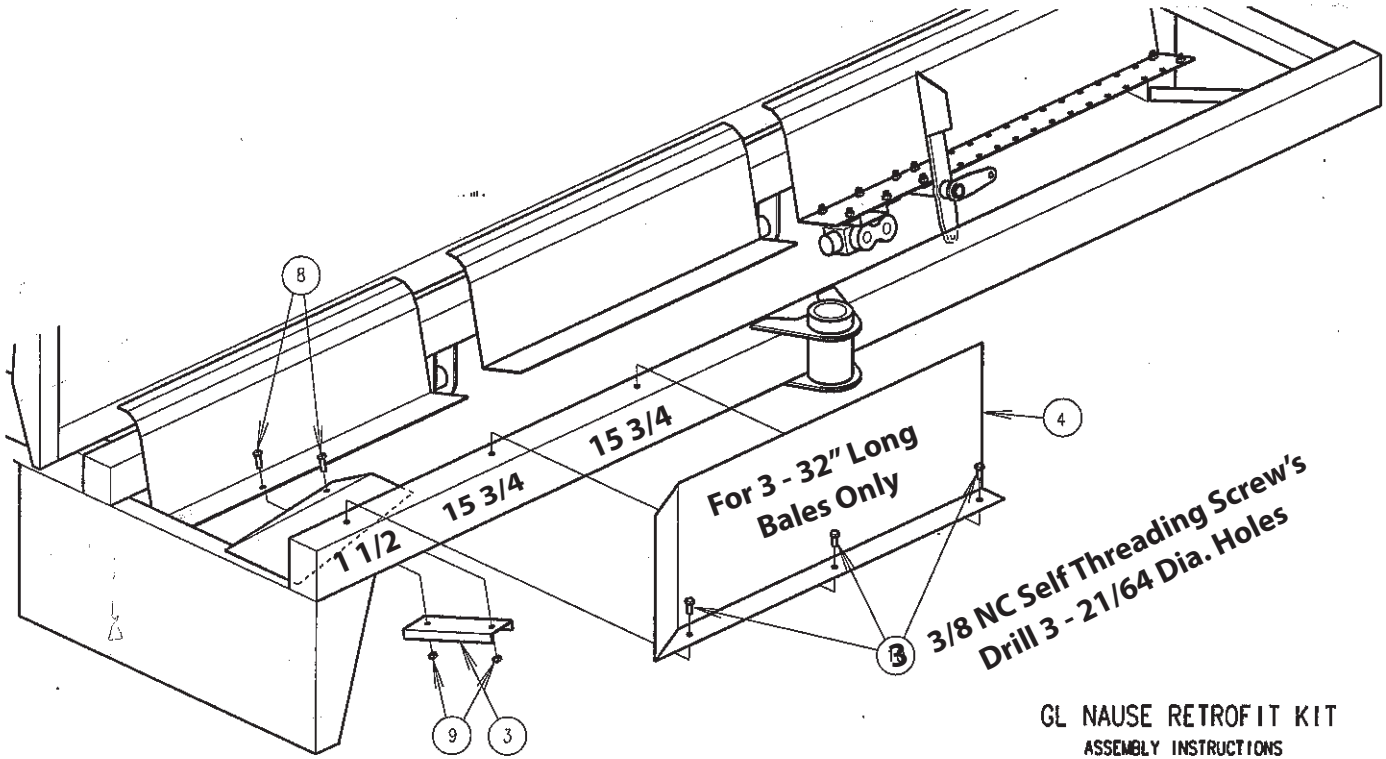

GL NAUSE RETROFIT KIT

ASSEMBLY INSTRUCTIONS

Rev. 2 - 1/1/2020